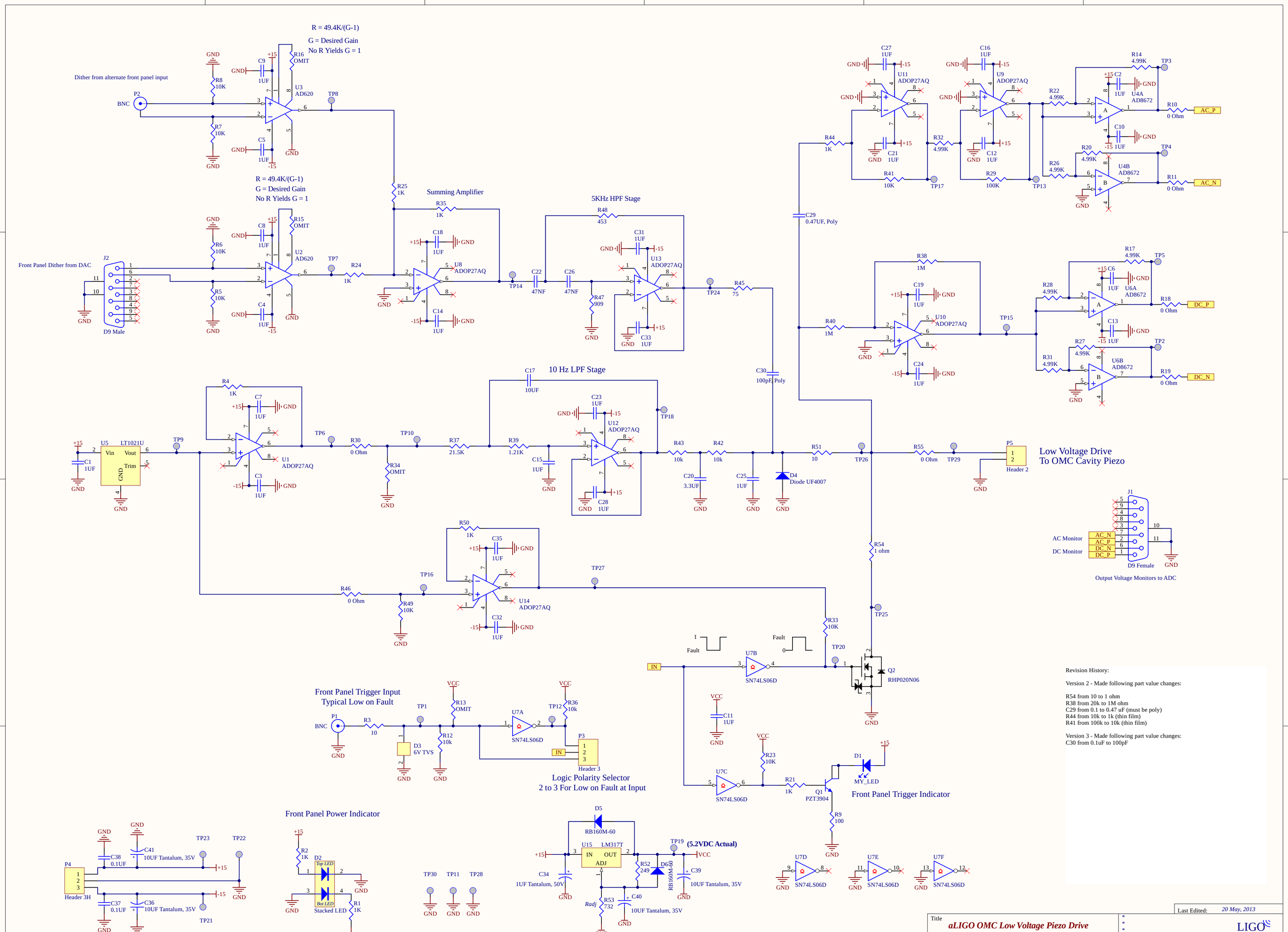

Revision History:

Version 2 - Made following part value changes:

R54 from 10 to 1 ohm
R38 from 20k to 1M ohm
C29 from 0.1 to 0.47 uF (must be poly)
R44 from 10k to 1k (thin film)
R41 from 100k to 10k (thin film)

Version 3 - Made following part value changes:
C30 from 0.1uF to 100pF

Title: *aLIGO OMC Low Voltage Piezo Drive*			Last Edited: *20 May, 2013*
Size: C	DCC Number: D1300024	SCH / PCB Revision: v3	Engineer: *R.S. Abbott*
File: C:\Users\dschaetz\Desktop\LVPiezo_v3 (2-22-2019)\LV Piezo Drive v3\LVPiezo_v3.SchDoc			Date: 2/22/2019
			Time: 12:29:55 PM
			Sheet 1 of 1